Schebler
CHIMNEY SYSTEMS

FyreGuard™

ZERO-CLEARANCE GREASE DUCT

Underwriters Laboratories Inc.®
LISTED

FyreGuard™

ZERO-CLEARANCE GREASE DUCT

FyreGuard™ grease duct, with *zero clearance* to combustibles, eliminates need for fire-rated chase.

FyreGuard™ brings a new level of fire safety protection to food service applications. From restaurants to sports arenas and other locations that require of cooking/grilling fumes and particulates, FyreGuard™ systems provide trouble-free installation, fast project completion and upgraded security.

LISTING

The Schebler FyreGuard™ grease duct system is Underwriters Laboratories Inc. (UL) 2221 Classification under file number R25748 and control number 41RE as a **zero clearance** to combustibles, 2-hour fire-rated grease duct. It also has the Underwriters Laboratories mark for Canada (cUL).

SYSTEM CONCEPT

- Prefabricated, modular, double wall system
- 4-inch insulation (11 lbs per sq in.) **zero clearance** to combustibles
- Easy-to-handle section lengths connected with the RapidLock™ Connection System
- Pressure-tight drawbands and high-temperature sealant

SURROUNDINGS

- Suitable for Type 1 or 2 grease hoods, installed per instructions
- May be enclosed with combustible construction
- Enclosed system may be adjacent to walls of combustible construction at **zero clearance**, per UL 2221 Classification

COMPLETE LINE OF FITTINGS AND SIZES AVAILABLE

- Even/odd diameters from 5”- 38” standard
- Standard components: straight sections, variable length joints, tee’s, elbows, clean outs, rain caps, roof penetration components, support members
- Special order components: virtually any custom fittings

MATERIAL AVAILABLE

The FyreGuard™ system is available in a variety of materials allowing the proper material selection for your specific application. The standard product features a 304 stainless steel liner and 430 stainless steel outer shell.For greater corrosion resistance 316 stainless steel is available for the liner and 304 or 316 stainless steel for the outer shell.

MATERIAL THICKNESS

The standard 304 stainless steel inner shell thickness is be .036". Standard 430 stainless steel outer shell thickness is .028".

SUPPORT LIMITS

Support plates and wall supports are utilized to support the weight of the chimney and to provide a fixed point to allow proper operation of expansion joints. In horizontal runs, supports should be placed adjacent to fittings that are not otherwise supported. See the individual part description for allowable support charts.

TESTS PERFORMED

The FyreGuard™ system has endured rigorous tests to obtain the listing. Just a few of the tests performed are:

- ***Structural Tests*** The support plates and wall supports have been physically tested to carry a load 4 times that allowed by our listing.
- ***Wind Load Tests*** Loads equivalent to 110 mph wind have been applied to the chimney with acceptable results.
- ***Zero Clearance to Combustibles*** The system has been subjected to a series of burn tests at temperatures up to 2000°F. The purpose of these tests is to determine zero clearances from the systems outer shell to combustible materials.
- ***Fire Barrier*** The system and fire stop have been subjected to temperatures up to 2000° to ensure structural integrity of the system and effectiveness of a fire stop in preventing fire passage to multiple floors of a building’s structure.

SCHEBLER VALUE

- ***Fast Project Completion***
  - 2-week lead time (vs. industry standard 3-6 weeks)
  - Trouble-free installation / detailed instructions
  - No on-site welding
- ***Maximum Strength / Long Life***
  - Unmatched dimensional accuracy for secure joint connections
  - Fully welded liners and shells
  - Unequalled support limits
- ***Complete System Design***
  - CAD drawings
  - 3D design solutions
  - Complete BOM
  - System sizing
- ***Special Fittings***

PART NUMBERS

All standard parts manufactured by Schebler are identified by a part number that describes their makeup and function.

The part numbers are made up as follows

1. The first series is the model designation, FG.
2. This is followed by the part name. For example, 47S, 90T and VS.
3. Next is the part's internal diameter in inches, such as 06, 12, 24.
4. Last is the liner/shell material designation.

Code	Liner / Shell Material
A	304 / Aluminized
B	316 / Aluminized
C	304 / 304 or all 304
D	304 / 316
E	316 / 316 or all 316
F	Galvanized
G	Aluminized
H	Painted Carbon Steel
N	304 / 430
P	316 / 430
Q	430
S	316 / 304

For example the part number for an 8" ID, Model FG, 47" long straight section with a 304 stainless steel liner and aluminized steel shell is: FG47S08A.

SEALANT

The S2000 is used for grease duct systems.

JOINT ASSEMBLY

Note: Wipe inner bands and flanges clean prior to assembly.

1. Apply continuous bead of Schebler sealant covering one of the ½" flange of the two parts being joined.
2. Fully fill the vee groove of the inner band with proper S2000 sealant.
3. Join the flanged ends of the two sections together.
4. Install the inner band around the flanges and rotate the flange bolt into the corresponding notch of the clip and tighten both bolts.
5. Tap around the inner band with a rawhide mallet and retighten the flange bolts until they bottom-out to ensure a tight joint.
6. Install the provided insulation strips over the inner band.
7. Place the outer band over the space between the outer shells of the adjoining sections. The flanges on the outer band fit into the grooves on the shells.
8. Rotate the flange bolt into the corresponding notch of the clip and tighten both bolts evenly until secure. For outdoor installations, apply a bead of high temperature sealant in the groove at the upper end of the outer band.

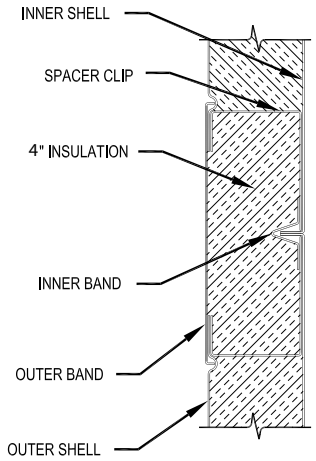

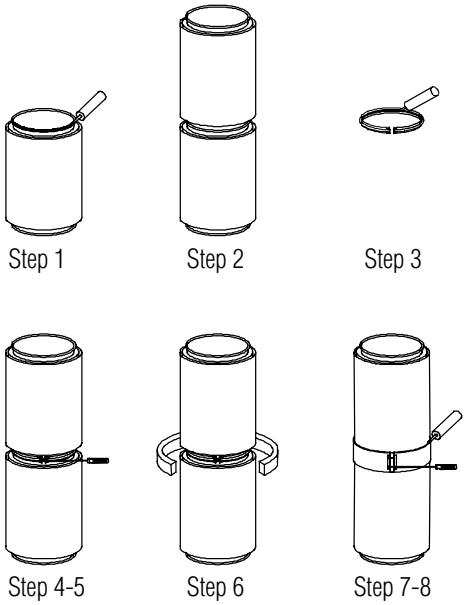

SYSTEM COMPONENTS

CUSTOM DIMENSIONS ARE AVAILABLE TO SUIT YOUR NEEDS IN EVEN AND ODD SIZES

ADAPTER KIT (FLANGED)

Part No. BKF

The Adapter Kit (Flanged) is used for securing pipe to a flanged appliance outlet. Beam clamps are provided for connection of the flanges, or the flange can be drilled in the field to match the appliance.

Includes 1 inner band and 1 seal ring to cover the gap between the inner and outer shells.

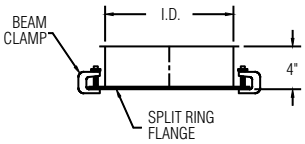

Part No. BKF	
I.D.	CLAMPS
6"	3
8"	4
10"	5
12"	6
14"	7
16"	8
18"	9
20"	10
22"	11
24"	12
26"	13
28"	14
30"	15
32"	16
34"	17
36"	18
38"	19

ADAPTER KIT (RAW)

Part No. BKR

The Adapter Kit (Raw) is used for securing pipe to an unflanged appliance outlet.

Includes 1 inner band and 1 seal ring to cover the gap between the inner and outer shells.

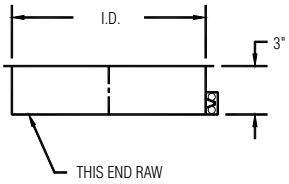

Part No. BKR
I.D.
6"
8"
10"
12"
14"
16"
18"
20"
22"
24"
26"
28"
30"
32"
34"
36"
38"

STRAIGHT SECTION

Part No. 18S, 29S, 47S and 59S

Standard lengths are as follows:

Diameter 6" is 18", 29" and 47"
Diameter 8" - 24" is 18", 29", 47" and 59"
Diameter 26" - 38" is 18", 29" and 47"

Custom parts can be manufactured to any length over 8".

Includes 1 inner and 1 outer band.

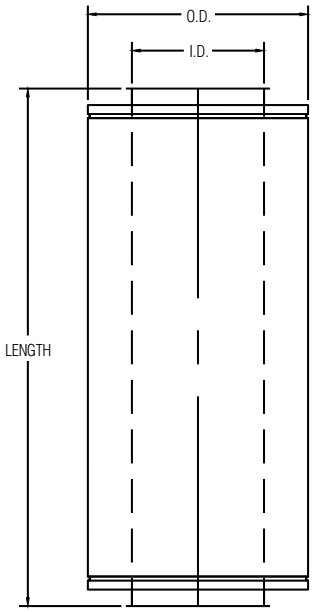

Part No. 18S/29S/47S/59S	
I.D.	O.D.
6"	14"
8"	16"
10"	18"
12"	20"
14"	22"
16"	24"
18"	26"
20"	28"
22"	30"
24"	32"
26"	34"
28"	36"
30"	38"
32"	40"
34"	42"
36"	44"
38"	46"

ADJUSTABLE LENGTH

Part No. 18AL, 22AL, 30AL AND 45AL

The Adjustable Length is used to provide adjustment during installation as well as to compensate for thermal expansion between fixed points.

The adjustment in length available for each part is as follows:

18AL = 14" to 17"
22AL = 16" to 21"
30AL = 20" to 29"
45AL = 27 ½" to 44"

Includes 1 inner and 1 outer band.

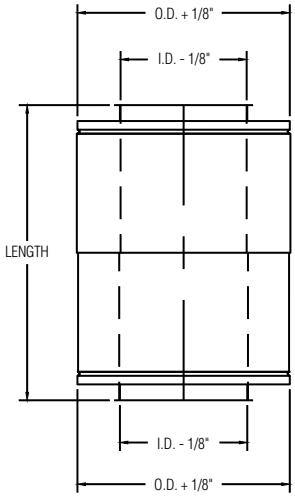

Part No. 18AL/22AL/30AL/45AL	
I.D.	O.D.
6"	14"
8"	16"
10"	18"
12"	20"
14"	22"
16"	24"
18"	26"
20"	28"
22"	30"
24"	32"
26"	34"
28"	36"
30"	38"
32"	40"
34"	42"
36"	44"
38"	46"

VARIABLE LENGTH SECTION

Part No. 18VS, 29VS and VS

The Variable Section adjusts to provide a fixed odd length between two sections. The minimum length is 5", the maximum is 18", 29" or 40". This part does not provide for thermal expansion.

Includes liner, shell, slip joint and 1 inner band.

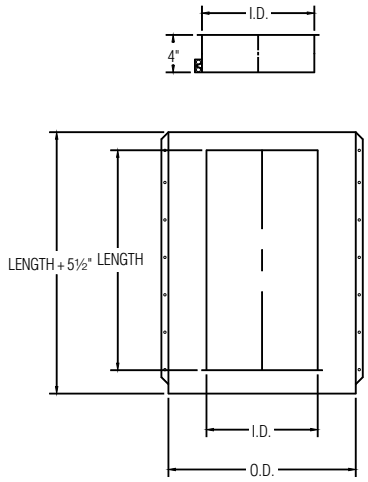

Part No. 18VS/29VS/VS	
I.D.	O.D.
6"	14"
8"	16"
10"	18"
12"	20"
14"	22"
16"	24"
18"	26"
20"	28"
22"	30"
24"	32"
26"	34"
28"	36"
30"	38"
32"	40"
34"	42"
36"	44"
38"	46"

90˚ GREASE TEE

Part No. 90GT

The 90˚ Grease Tee is used with an End Cap to provide access into a grease duct system. A circular dam is provided to prevent grease from running out of the duct when the cap is removed.

Includes 2 inner bands and 2 outer bands.

Note: When ordering, specify dam in main or in tap.

See 90T drawing

Part No. 90GT	
I.D.	A
6"	10 ½"
8"	11 ½"
10"	12 ½"
12"	13 ½"
14"	14 ½"
16"	15 ½"
18"	16 ½"
20"	17 ½"
22"	18 ½"
24"	19 ½"
26"	20 ½"
28"	21 ½"
30"	22 ½"
32"	23 ½"
34"	24 ½"
36"	25 ½"
38"	26 ½"

TAPERED INCREASER

Part No. TI

The Tapered Increaser is used when a change in pipe diameter is required.

Includes 1 inner and 1 outer band of both smaller and larger size.

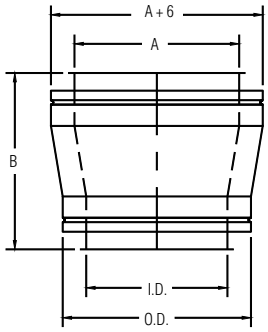

Part No. TI								
I.D.	A	B	A	B	A	B	A	B
6"	8"	15"	10"	18"	12"	21"	14"	24"
8"	10"	15"	12"	18"	14"	21"	16"	24"
10"	12"	15"	14"	18"	16"	21"	18"	24"
12"	14"	15"	16"	18"	18"	21"	20"	24"
14"	16"	15"	18"	18"	20"	21"	22"	24"
16"	18"	15"	20"	18"	22"	21"	24"	24"
18"	20"	15"	22"	18"	24"	21"	26"	24"
20"	22"	15"	24"	18"	26"	21"	28"	24"
22"	24"	15"	26"	18"	28"	21"	30"	24"
24"	26"	15"	28"	18"	30"	21"	32"	24"
26"	28"	15"	30"	18"	32"	21"	34"	24"
28"	30"	15"	32"	18"	34"	21"	36"	24"
30"	32"	15"	34"	18"	36"	21"	38"	24"
32"	34"	15"	36"	18"	38"	21"	40"	24"
34"	36"	15"	38"	18"	40"	21"	42"	24"
36"	38"	15"	40"	18"	42"	21"	44"	24"
38"	40"	15"	42"	18"	44"	21"	46"	24"

Available in odd sizes.
Call for odd diameter taper increaser information.

ABRUPT INCREASER

Part No. AI

The Abrupt Increaser is used to connect two sections of different diameters in a shorter space than a tapered increaser.

Includes 1 inner band of larger and smaller sizes and 1 seal ring.

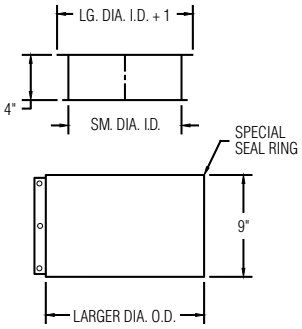

SYSTEM COMPONENTS

CUSTOM DIMENSIONS ARE AVAILABLE TO SUIT YOUR NEEDS IN EVEN AND ODD SIZES

90˚ TEE

Part No. 90T

The 90˚ Tee is used to join horizontal and vertical sections, as well as to provide for connection of drain or inspection fittings. Use either the drain tee cap or the end cap for closure of the unused opening.

Includes 2 inner bands and 2 outer bands.

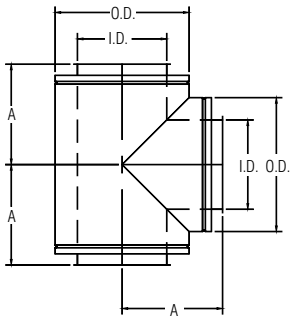

Part No. 90T	
I.D.	A
6"	10 ½"
8"	11 ½"
10"	12 ½"
12"	13 ½"
14"	14 ½"
16"	15 ½"
18"	16 ½"
20"	17 ½"
22"	18 ½"
24"	19 ½"
26"	20 ½"
28"	21 ½"
30"	22 ½"
32"	23 ½"
34"	24 ½"
36"	25 ½"
38"	26 ½"

REDUCING 90˚ TEE

Part No. R90T

The Reducing 90° Tee is used to join horizontal and vertical sections of different sizes, as well as provide for connection to drain or inspection fittings. Use either the drain tee cap or the end cap for closure of the unused opening. Specify size of branch required.

Includes 1 each inner band and outer band for larger and smaller opening.

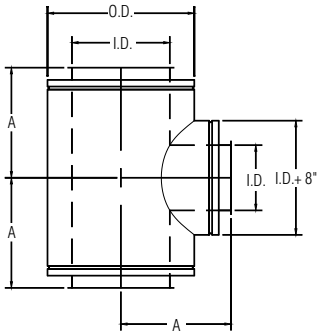

Part No. R90T	
I.D.	A
6"	10 ½"
8"	11 ½"
10"	12 ½"
12"	13 ½"
14"	14 ½"
16"	15 ½"
18"	16 ½"
20"	17 ½"
22"	18 ½"
24"	19 ½"
26"	20 ½"
28"	21 ½"
30"	22 ½"
32"	23 ½"
34"	24 ½"
36"	25 ½"
38"	26 ½"

45˚ LATERAL TEE

Part No. 45LT

The 45˚ Lateral Tee is used for low flow resistance entry into a stack or breeching.

Includes 2 inner bands and 2 outer bands.

Note: Grease tees available 1 ½" containment dam located at one opening.

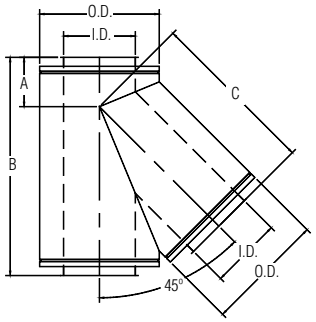

Part No. 45LT			
I.D.	A	B	C
6"	7"	28"	21"
8"	7 3/8"	30 3/4"	23 3/8"
10"	7 3/4"	33 1/2"	25 3/4"
12"	8 1/4"	36 1/2"	28 1/4"
14"	8 5/8"	39 1/4"	30 5/8"
16"	9 1/16"	42 1/8"	33 1/16"
18"	9 1/2"	45"	35 1/2"
20"	9 7/8"	47 3/4"	37 7/8"
22"	10 5/16"	50 5/8"	40 5/16"
24"	10 3/4"	53 1/2"	42 3/4"
26"	11 1/8"	56 1/4"	45 1/8"
28"	11 9/16"	59 1/8"	47 9/16"
30"	12"	62"	50"
32"	12 3/8"	64 3/4"	52 3/8"
34"	12 3/4"	67 1/2"	54 3/4"
36"	13 3/16"	70 3/8"	57 3/16"
38"	13 5/8"	73 1/4"	59 5/8"

REDUCING 45˚ LATERAL TEE

Part No. R45LT

The Reducing 45° Lateral Tee is used for low flow resistance entry into a stack or breeching. when the stack or breeching is a lartger size. Specify size of branch required.

Includes 1 each inner band and outer band for larger and smaller opening.

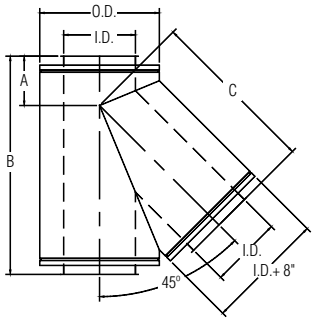

Part No. R45LT			
I.D.	A	B	C
6"	7"	28"	21"
8"	7 3/8"	30 3/4"	23 3/8"
10"	7 3/4"	33 1/2"	25 3/4"
12"	8 1/4"	36 1/2"	28 1/4"
14"	8 5/8"	39 1/4"	30 5/8"
16"	9 1/16"	42 1/8"	33 1/16"
18"	9 1/2"	45"	35 1/2"
20"	9 7/8"	47 3/4"	37 7/8"
22"	10 5/16"	50 5/8"	40 5/16"
24"	10 3/4"	53 1/2"	42 3/4"
26"	11 1/8"	56 1/4"	45 1/8"
28"	11 9/16"	59 1/8"	47 9/16"
30"	12"	62"	50"
32"	12 3/8"	64 3/4"	52 3/8"
34"	12 3/4"	67 1/2"	54 3/4"
36"	13 3/16"	70 3/8"	57 3/16"
38"	13 5/8"	73 1/4"	59 5/8"

90˚ BOOT TEE

Part No. BT

The 90˚ Boot Tee is used to join horizontal and vertical sections with lower resistance as well as to provide for connection of drain or inspection fittings. Use either the drain tee cap or the end cap for closure of the unused opening.

Includes 2 inner bands and 2 outer bands.

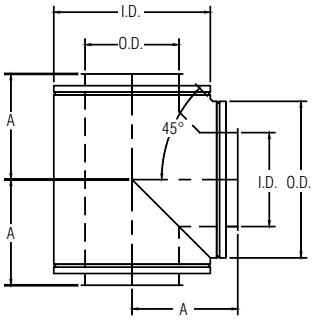

Part No. BT	
I.D.	A
6"	10 ½"
8"	11 ½"
10"	12 ½"
12"	13 ½"
14"	14 ½"
16"	15 ½"
18"	16 ½"
20"	17 ½"
22"	18 ½"
24"	19 ½"
26"	20 ½"
28"	21 ½"
30"	22 ½"
32"	23 ½"
34"	24 ½"
36"	25 ½"
38"	26 ½"

90˚ WYE

Part No. 90Y

The 90˚ Wye is used for joining runs where low flow resistance is desired. All openings must be the same size. For connection to smaller diameter sections use the tapered or abrupt increasers.

Includes 2 inner bands and 2 outer bands.

Note: Grease wye available 1 ½" containment dam located at one opening.

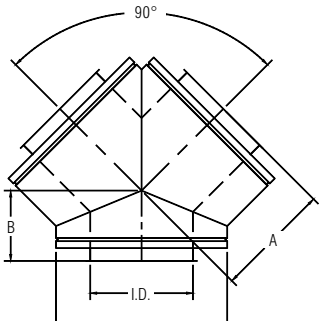

Part No. 90Y		
I.D.	A	B
6"	10 ½"	7"
8"	11 ½"	7 13/32"
10"	12 ½"	7 13/16"
12"	13 ½"	8 7/32"
14"	14 ½"	8 5/8"
16"	15 ½"	9 1/16"
18"	16 ½"	9 7/16"
20"	17 ½"	9 7/8"
22"	18 ½"	10 9/32"
24"	19 ½"	10 23/32"
26"	20 ½"	11 1/8"
28"	21 ½"	11 17/32"
30"	22 ½"	11 31/32"
32"	23 ½"	12 3/8"
34"	24 ½"	12 25/32"
36"	25 ½"	13 3/16"
38"	26 ½"	13 11/16"

END CAP

Part No. EC

The End Cap is used to close an unused tee opening and to provide a means of accessing the interior of the system for inspection and cleaning.

Includes 1 inner band.

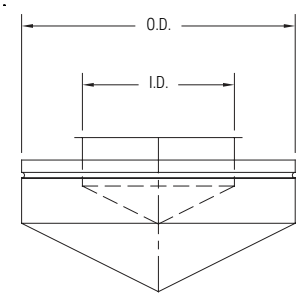

Part No. EC	
I.D.	O.D.
6"	14"
8"	16"
10"	18"
12"	20"
14"	22"
16"	24"
18"	26"
20"	28"
22"	30"
24"	32"
26"	34"
28"	36"
30"	38"
32"	40"
34"	42"
36"	44"
38"	46"

DRAIN TEE CAP

Part No. DTC

The Drain Tee Cap is used to close an unused tee opening and to provide a drain at the base of a vertical chimney.

Includes 1 inner band.

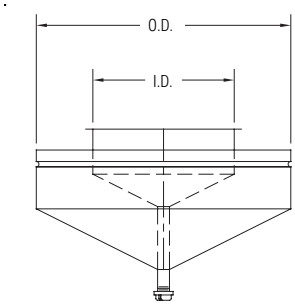

Part No. DTC	
I.D.	O.D.
6"	14"
8"	16"
10"	18"
12"	20"
14"	22"
16"	24"
18"	26"
20"	28"
22"	30"
24"	32"
26"	34"
28"	36"
30"	38"
32"	40"
34"	42"
36"	44"
38"	46"

SYSTEM COMPONENTS

CUSTOM DIMENSIONS ARE AVAILABLE TO SUIT YOUR NEEDS IN EVEN AND ODD SIZES

90° ELBOW

Part No. 90L

The 90° Elbow is used when making a 90° directional change. The 90° elbow is available in sizes 6" through 24". For a 90° directional change in diameters from 26" through 38" use two 45° elbows.

Includes 1 inner and 1 outer band.

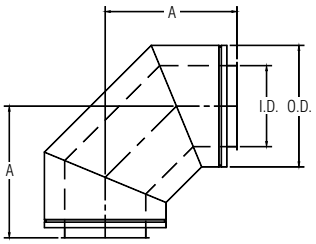

Part No. 90L	
I.D.	A
6"	13 ½"
8"	15 ½"
10"	17 ½"
12"	19 ½"
14"	21 ½"
16"	23 ½"
18"	25 ½"
20"	27 ½"
22"	29 ½"
24"	31 ½"

45° ELBOW

Part No. 45L

The 45° Elbow is used when a vertical or horizontal direction change of 45° is desired.

Includes 1 inner and 1 outer band.

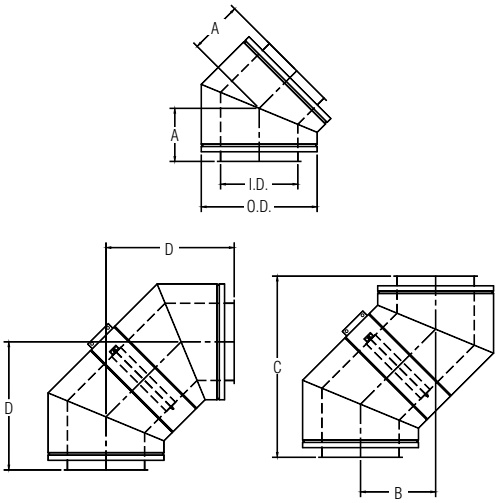

Part No. 45L				
I.D.	A	B	C	D
6"	7"	9 29/32"	23 29/32"	16 29/32"
8"	7 3/8"	10 7/16"	25 3/16"	17 13/16"
10"	7 3/16"	11 3/64"	26 43/64"	18 55/64"
12"	8 1/4"	11 43/64"	28 11/64"	19 59/64"
14"	8 5/8"	12 13/64"	29 29/64"	20 53/64"
16"	9 1/16"	12 13/16"	30 15/16"	21 7/8"
18"	9 1/2"	13 7/16"	32 7/16"	22 15/16"
20"	9 7/8"	13 31/32"	33 23/32"	23 27/32"
22"	10 5/16"	14 37/64"	35 13/64"	24 57/64"
24"	10 3/4"	15 13/64"	36 45/64"	25 61/64"
26"	11 1/8"	15 47/64"	37 63/64"	26 55/64"
28"	11 9/16"	16 23/64"	39 31/64"	27 59/64"
30"	11 15/16"	16 7/8"	40 3/4"	28 13/16"
32"	12 3/8"	17 1/2"	42 1/4"	29 7/8"
34"	12 3/4"	18 1/32"	43 17/32"	30 25/32"
36"	13 3/16"	18 21/32"	45 1/32"	31 27/32"
38"	13 5/8"	19 17/64"	46 33/64"	32 57/64"

30° ELBOW

Part No. 30L

The 30° Elbow is used when a vertical or horizontal direction change of 30° is desired.

Includes 1 inner and 1 outer band.

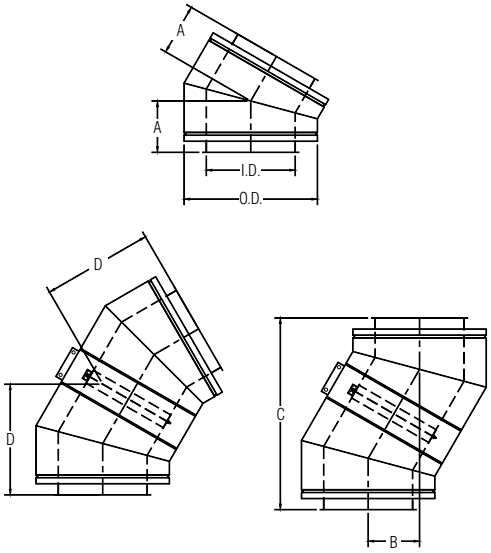

Part No. 30L				
I.D.	A	B	C	D
6"	6 1/8"	6 1/8"	22 55/64"	13 13/64"
8"	6 3/8"	6 3/8"	23 51/64"	13 47/34"
10"	6 5/8"	6 5/8"	24 23/32"	14 9/32"
12"	6 15/16"	6 15/16"	25 57/64"	14 61/64"
14"	7 3/16"	7 3/16"	26 23/64"	15 31/64"
16"	7 7/16"	7 7/16"	27 3/4"	16 1/32"
18"	7 3/4"	7 3/4"	28 59/64"	16 45/64"
20"	8"	8"	29 55/64"	17 15/64"
22"	8 1/4"	8 1/4"	30 51/64"	17 23/32"
24"	8 1/2"	8 1/2"	31 23/32"	18 5/16"
26"	8 3/4"	8 3/4"	32 21/32"	18 55/64"
28"	9 1/16"	9 1/16"	33 53/64"	19 17/32"
30"	9 5/16"	9 5/16"	34 3/4"	20 1/16"
32"	9 9/16"	9 9/16"	35 11/16"	20 39/64"
34"	9 7/8"	9 7/8"	36 55/64"	21 9/32"
36"	10 1/8"	10 1/8"	37 25/32"	21 13/16"
38"	10 3/8"	10 3/8"	38 23/32"	22 23/64"

DRAIN SECTION

Part No. DS

The Drain Section is used to drain rain water and condensation from within the stack. The NPT nipple should be connected to a suitable drain.

Includes 1 inner band and 1 outer band.

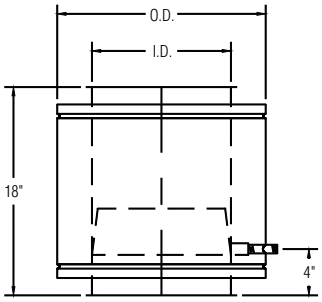

Part No. DS	
I.D.	O.D.
6"	14"
8"	16"
10"	18"
12"	20"
14"	22"
16"	24"
18"	26"
20"	28"
22"	30"
24"	32"
26"	34"
28"	36"
30"	38"
32"	40"
34"	42"
36"	44"
38"	46"

HORIZONTAL DRAIN

Part No. HD

The Horizontal Drain is used to drain rain water and condensation from within the stack. The NPT nipple should be connected to a suitable drain.

Includes 1 inner band and 1 outer band.

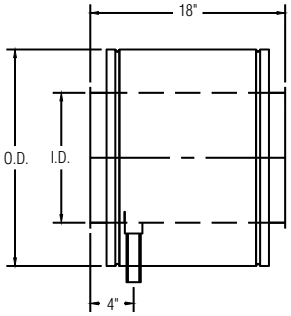

Part No. HD	
I.D.	O.D.
6"	14"
8"	16"
10"	18"
12"	20"
14"	22"
16"	24"
18"	26"
20"	28"
22"	30"
24"	32"
26"	34"
28"	36"
30"	38"
32"	40"
34"	42"
36"	44"
38"	46"

NOZZLE SECTION

Part No. NS

The Nozzle Section is used to attach plumbing equipment to grease ducts.

Includes 1 inner band and 1 outer band.

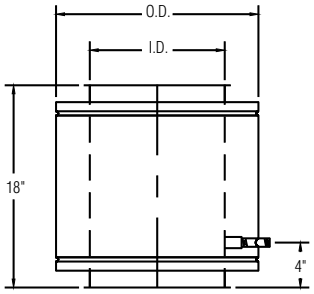

Part No. NS	
I.D.	O.D.
6"	14"
8"	16"
10"	18"
12"	20"
14"	22"
16"	24"
18"	26"
20"	28"
22"	30"
24"	32"
26"	34"
28"	36"
30"	38"
32"	40"
34"	42"
36"	44"
38"	46"

BASE DRAIN SECTION

Part No. BD

The Base Drain Section provides a bottom closure and drain attachment for base supported chimneys.

Includes 1 inner band and 1 outer band.

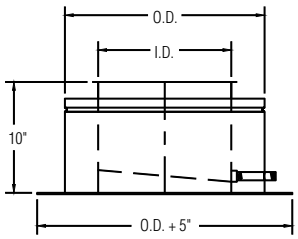

Part No. BD	
I.D.	O.D.
6"	14"
8"	16"
10"	18"
12"	20"
14"	22"
16"	24"
18"	26"
20"	28"
22"	30"
24"	32"
26"	34"
28"	36"
30"	38"
32"	40"
34"	42"
36"	44"
38"	46"

SYSTEM COMPONENTS

CUSTOM DIMENSIONS ARE AVAILABLE TO SUIT YOUR NEEDS IN EVEN AND ODD SIZES

FLASHING

Part No. FL

The Flashing is used in conjunction with the rain collar to seal roof penetrations. This part is designed for flat roofs. Custom pitched flashings are available upon request.

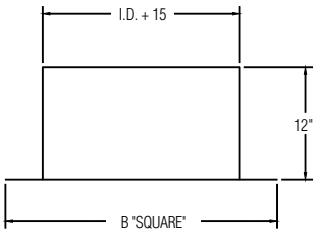

Part No. FL		
I.D.	A	B
6"	21 1/8"	29 1/8"
8"	23"	31"
10"	25"	33"
12"	27"	35"
14"	29"	37"
16"	31"	39"
18"	33"	41"
20"	35"	43"
22"	37"	45"
24"	39"	47"
26"	41"	49"
28"	43"	51"
30"	45"	53"
32"	47"	55"
34"	49"	57"
36"	51"	59"
38"	53"	61"

RAIN CAP

Part No. CC

The Rain Cap is used at stack terminations to prevent water from entering the flue. A drain should be used at the base of stacks to drain off water that may be blown into the flue.

Includes 1 inner band and 1 closure ring to seal outer shell joint.

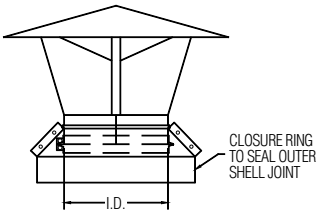

Part No. CC		
I.D.	A	B
6"	20"	4 1/2"
8"	22"	6"
10"	24"	7 1/2"
12"	26"	9"
14"	28"	10 1/2"
16"	30"	12"
18"	32"	13 1/2"
20"	34"	15"
22"	36"	16 1/2"
24"	38"	18"
26"	40"	19 1/2"
28"	42"	21"
30"	44"	22 1/2"
32"	49"	24"
34"	52"	25 1/2"
36"	55"	27"
38"	58"	28 1/2"

RAIN COLLAR

Part No. RC

The Rain Collar is used in conjunction with the flashing to seal roof penetrations.

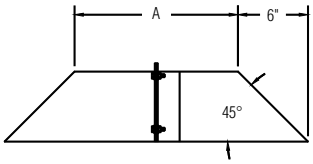

Part No. RC	
I.D.	O.D.
6"	14 1/16"
8"	16 1/16"
10"	18 1/16"
12"	20 1/16"
14"	22 1/16"
16"	24 1/16"
18"	26 1/16"
20"	28 1/16"
22"	30 1/16"
24"	32 1/16"
26"	34 1/16"
28"	36 1/16"
30"	38 1/16"
32"	40 1/16"
34"	42 1/16"
36"	44 1/16"
38"	46 1/16"

HOOD TRANSITIONS

The transitions between the grease hood or listed ventilator and the Schebler grease duct is made using a transition constructed of 20 gauge or heavier stainless steel. This transition should be field seal welded to the hood and the hood adaptor kit (BKF). The adaptor kit is typically supplied with 1/2" flanges at each end. If required, one of the flanges can be deleted so that a field weld can be made more conventionally.

If the transition is supplied by the Schebler Company, the transition will be factory welded to the BKF. Therefore, a field weld is only required between the transition and the hood.

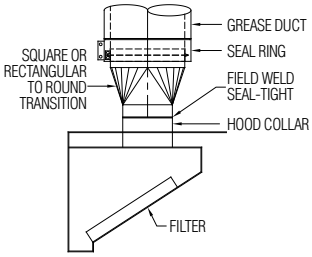

ROOF TRANSITIONS

The grease duct shall terminate with a minimum of 10 ft. (3.048m) of clearance from the outlet to adjacent buildings, property lines and air intakes. Where space limitations absolutely prevent a 10 ft. (3.048m) horizontal separation from an air intake, a vertical separation will be acceptable with the exhaust outlet being a minimum of 3 ft. (.93m) above any air intake located withint 10 ft. (3.048m) horizontally.

The exhaust shall be directed up and away from the surface of the roof and a minimum of 40" (1.02m) above the roof surface.

Schebler offers a fan adaptor (part FA) that can be used for connecting flue to a curb mounted rooftop fan.

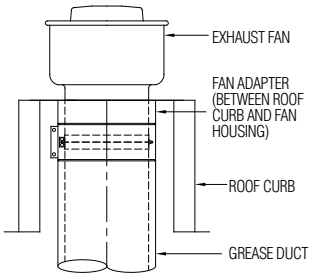

FIRESTOP

Part No. FS

The Firestop is used when penetrating through a fire rated floor or wall.

Includes 1 closure seal ring,
2 cover ring halves,
1 - 12" wide insulation strip,
1 - 4" wide insulation strip
and Hilti Firestop Putty.

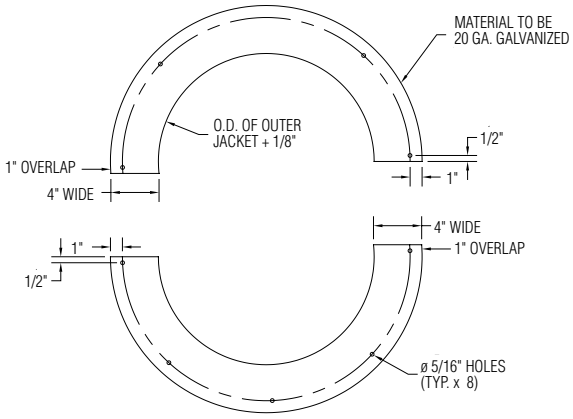

COVER RING

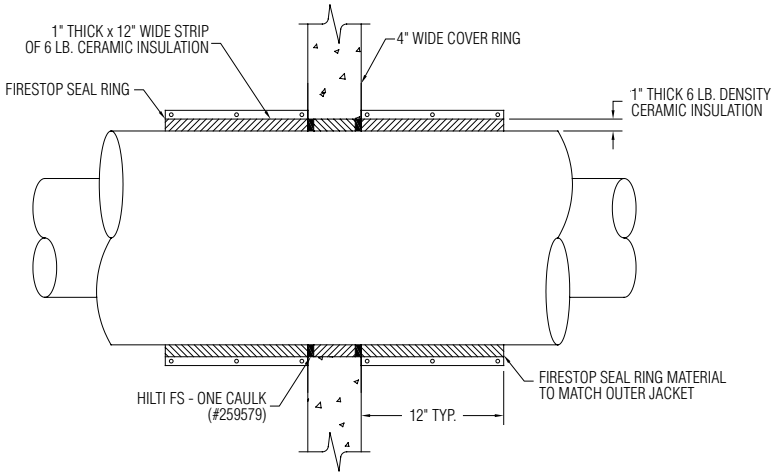

WALL PENETRATION

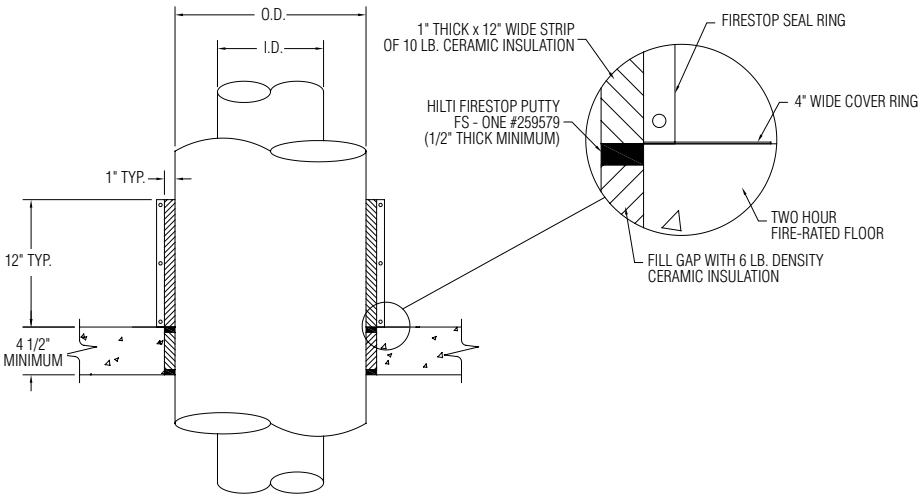

FLOOR PENETRATION

FAN ADAPTER

Part No. FA

The Fan Adapter is used to attach grease duct to an exhaust fan or kitchen hood.

Includes 1 inner and 1 outer band.

Note: Plenum boxes available for multiple fan systems.

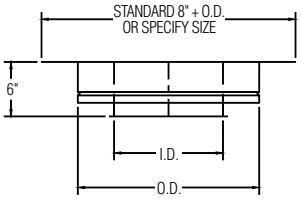

Part No. FA	
I.D.	O.D.
6"	14"
8"	16"
10"	18"
12"	20"
14"	22"
16"	24"
18"	26"
20"	28"
22"	30"
24"	32"
26"	34"
28"	36"
30"	38"
32"	40"
34"	42"
36"	44"
38"	46"

SYSTEM COMPONENTS

CUSTOM DIMENSIONS ARE AVAILABLE TO SUIT YOUR NEEDS IN EVEN AND ODD SIZES

SQUARE-TO-ROUND TRANSITIONS

The Square-to-Round Transitions are used when connecting to appliances with square or rectangular outlets. The base can be raw for field welding or flanged for field drilling and bolting.

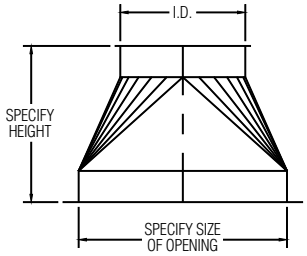

SUPPORT PLATE

Part No. SP

The Support Plate is the primary load carrying member of the chimney assembly. This part is designed to support (B) (See Chart below) feet of vertical chimney section as well as provide fixed points in breeching runs.

Includes 1 inner band and 2 half outer bands.

Note: This part must be placed at the connection of two flue sections.

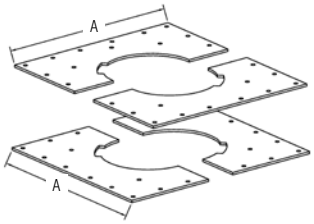

Part No. SP		
I.D.	A	B(FT)
6"	18"	178'
8"	20"	173'
10"	22"	169'
12"	24"	159'
14"	26"	155'
16"	28"	150'
18"	30"	145'
20"	32"	141'
22"	34"	136'
24"	36"	132'
26"	38"	127'
28"	40"	122'
30"	42"	118'
32"	44"	113'
34"	46"	108'
36"	48"	104'

WALL SUPPORT

Part No. WS

The Wall Support is used to provide chimney support along a wall. The wall support will maintain the required clearance to combustible structures when properly installed and can support (C) (See Chart Below) feet of vertical chimney.

Includes 1 inner band and 2 half outer bands.

Note: This part must be placed at the connection of two flue sections.

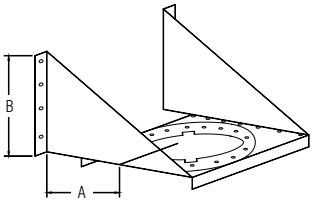

Part No. WS			
I.D.	A	B	C(FT)
6"	8"	10 5/16"	120'
8"	10"	12 5/8"	117'
10"	11"	13 11/16"	113'
12"	12"	15 1/16"	110'
14"	13"	16 3/8"	107'
16"	14"	17 3/4"	103'
18"	16"	19 3/4"	100'
20"	17"	21 7/16"	97'
22"	19"	23 1/2"	93'
24"	20"	24 13/16"	90'
26"	23"	26 13/16"	87'
28"	24"	28 13/16"	83'
30"	26"	30 13/16"	80'
32"	27"	31 9/16"	77'
34"	29"	33 9/16"	73'
36"	30"	34 7/8"	70'
38"	32"	36 7/8"	67'

GUY SECTION

Part No. GS

The Guy Section is to be used when the chimney extends beyond the vertical limits above the roof line. The guy section should be connected to guy wires or a rigid guying structure.

Includes 1 inner band and 2 half outer bands.

Note: This part must be placed at the connection of two flue sections.

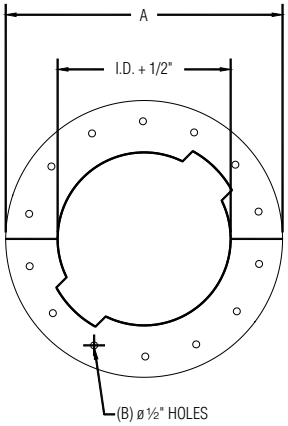

Part No. GS		
I.D.	A	B
6"	17 1/8"	12
8"	19"	12
10"	21"	12
12"	23"	12
14"	25"	12
16"	27"	12
18"	29"	12
20"	31"	12
22"	33"	16
24"	35"	16
26"	37"	16
28"	39"	16
30"	41"	20
32"	43"	20
34"	45"	20
36"	47"	20
38"	49"	24

FULL RING

Part No. FR

The Full Ring is used to guide horizontal and vertical runs. The part is simply bolted around the outer shell then rigidly connected to the building structure.

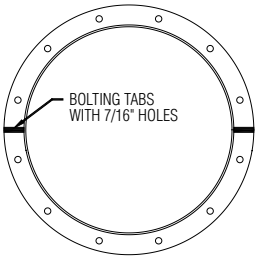

HANGER

Part No. HG

The Hanger is used to support long horizontal runs, placed under the flue and then supported by rods connecting to the building structure.

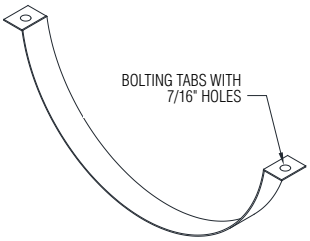

FLOOR/ROOF GUIDE

Part No. FRG

The Floor/Roof Guide is used at the penetration of floors and roofs to guide the chimney. This part is designed to absorb lateral loads only. It will not support vertical chimney sections.

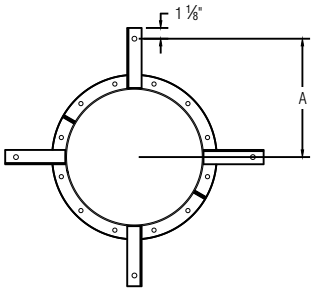

WALL GUIDE

Part No. WG

The Wall Guide is used to guide long vertical runs that are placed adjacent to walls. This part will maintain proper clearance to combustibles when properly installed.

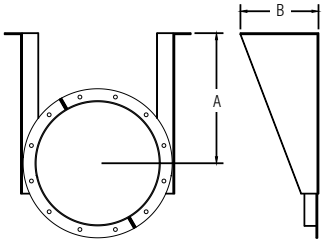

Part No. FR

FLUE ID	RING ID	ANGLE SIZE	# HOLES	HOLE SIZE	B.C.
6"	14 3/16"	1 1/4" x 1 1/4" x 1/8"	12	7/16"	15 13/16"
8"	16 3/16"	1 1/2" x 1 1/2" x 3/16"	16	7/16"	18 1/8"
10"	18 3/16"	1 1/2" x 1 1/2" x 3/16"	16	7/16"	20 1/8"
12"	20 3/16"	1 1/2" x 1 1/2" x 3/16"	20	7/16"	22 1/8"
14"	22 3/16"	1 1/2" x 1 1/2" x 3/16"	20	7/16"	24 3/8"
16"	24 3/16"	1 1/2" x 1 1/2" x 3/16"	20	7/16"	26 3/8"
18"	26 3/16"	2" x 2" x 3/16"	24	7/16"	28 1/2"
20"	28 3/16"	2" x 2" x 3/16"	24	7/16"	30 1/2"
22"	30 3/16"	2" x 2" x 3/16"	28	7/16"	32 1/2"
24"	32 3/16"	2" x 2" x 3/16"	28	7/16"	34 1/2"
26"	34 3/16"	2" x 2" x 3/16"	32	7/16"	36 1/2"
28"	36 3/16"	2" x 2" x 3/16"	32	7/16"	38 1/2"
30"	38 3/16"	2" x 2" x 3/16"	36	7/16"	40 1/2"
32"	40 3/16"	2" x 2" x 3/16"	36	7/16"	42 1/2"
34"	42 3/16"	2" x 2" x 3/16"	40	7/16"	44 1/2"
36"	44 3/16"	2" x 2" x 3/16"	40	7/16"	46 1/2"
38"	46 3/16"	2" x 2" x 3/16"	44	7/16"	48 1/2"

Part No. FRG

I.D.	A
6"	12 3/8"
8"	13 3/8"
10"	14 3/8"
12"	15 3/8"
14"	16 3/8"
16"	17 3/8"
18"	18 3/8"
20"	19 3/8"
22"	20 3/8"
24"	21 3/8"
26"	22 3/8"
28"	23 3/8"
30"	24 3/8"
32"	25 3/8"
34"	26 3/8"
36"	27 3/8"
38"	28 3/8"

Part No. WG

I.D.	A	B
6"	9"	7 3/8"
8"	11"	7 7/8"
10"	12"	8 1/8"
12"	13"	8 3/8"
14"	14"	8 5/8"
16"	15"	9"
18"	17"	9 7/16"
20"	18"	9 3/4"
22"	20"	10 1/4"
24"	21"	10 9/16"
26"	23"	11"
28"	24"	11 5/16"
30"	26"	11 13/16"
32"	27"	12 1/8"
34"	29"	12 5/8"
36"	30"	12 15/16"
38"	32"	13 7/16"

SYSTEM COMPONENTS

CUSTOM DIMENSIONS ARE AVAILABLE TO SUIT YOUR NEEDS IN EVEN AND ODD SIZES

FYREGUARD™ WEIGHT CHART

		Inside Diameter (Inches)																
Part Description	**Part No.**	**6"**	**8"**	**10"**	**12"**	**14"**	**16"**	**18"**	**20"**	**22"**	**24"**	**26"**	**28"**	**30"**	**32"**	**34"**	**36"**	**38"**
14" to 17" Adjustable	18AL	25 lbs.	29	33	37	42	46	50	54	59	63	67	71	88	92	97	102	121
16" to 21" Adjustable	22AL	29 lbs.	34	39	44	49	54	59	64	69	74	79	84	103	109	114	120	142
20" to 29" Adjustable	30AL	37 lbs.	43	50	56	63	69	76	82	89	95	101	108	134	141	149	156	183
27½" to 44" Adjustable	45AL	52 lbs.	61	71	80	89	98	107	117	126	135	144	153	191	202	213	223	259
29" Straight Section	29S	34 lbs.	40	46	51	57	63	69	75	81	87	93	99	122	129	136	143	167
30 Degree Elbow	30L	16 lbs.	19	22	26	30	39	44	49	55	60	66	72	78	85	92	99	120
45 Degree Lateral Elbow	45L	17 lbs.	21	26	30	35	47	53	60	67	74	82	90	99	108	116	126	153
45 Degree Tee	45LT	44 lbs.	56	70	85	101	140	163	187	213	241	270	301	334	368	403	440	532
47" Straight Section	47S	52 lbs.	61	71	80	89	98	107	117	126	135	144	153	191	202	213	223	259
59" Straight Section	59S	-	76	87	99	110	122	133	144	156	167	-	-	-	-	-	-	-
90 Degree Elbow	90L	26 lbs.	34	44	55	67	95	112	131	151	173	-	-	-	-	-	-	-
90 Degree Grease Tee	90GT	35 lbs.	44	53	63	73	99	113	128	144	161	178	197	216	236	257	279	338
90 Degree Wye	90Y	35 lbs.	43	52	62	73	98	112	127	143	159	177	195	215	235	256	277	335
90 Degree Tee	90T	31 lbs.	38	46	55	64	86	98	111	125	139	154	170	187	204	222	241	292
Abrupt Increaser	AI	9 lbs.	10	12	14	16	18	20	21	23	25	27	29	31	33	34	36	45
Base Drain	BD	25 lbs.	30	34	38	42	46	51	55	59	63	67	72	82	87	91	96	110
Adapter Kit Flanged	BKF	9 lbs.	10	12	14	16	18	20	21	23	25	27	29	31	33	34	36	45
Adapter Kits Raw	BKR	6 lbs.	7	8	9	10	11	12	13	14	16	17	18	19	20	21	22	30
Drain Section	DS	24 lbs.	28	32	36	40	44	48	52	56	60	64	68	84	88	93	98	116
Drain Tee Cap	DTC	7 lbs.	8	9	10	12	14	15	17	19	22	24	26	38	42	45	49	58
End Cap	EC	6 lbs.	7	8	9	11	13	14	16	18	21	23	25	37	41	44	48	57
Fan Adapter	FA	20 lbs.	23	26	29	33	36	39	43	46	50	53	56	65	69	72	76	90
Flashing	FL	15 lbs.	16	18	19	21	22	24	25	27	29	30	32	34	35	37	39	40
Floor/Roof Guide	FRG	12 lbs.	15	16	17	18	19	24	25	27	27	30	30	32	33	34	35	36
Full Ring	FR	6 lbs.	9	10	11	12	13	18	19	21	21	24	24	26	27	28	29	30
Guy Section	GS	20 lbs.	23	27	30	33	36	40	43	46	50	53	56	59	63	66	69	76
Half Ring	HR	3 lbs.	5	5	5	6	6	9	10	10	11	12	12	13	13	14	15	15
Horizontal Drain	HD	24 lbs.	28	32	36	40	44	48	52	56	60	64	68	84	88	93	98	116
Nozzle Section	NS	24 lbs.	28	32	36	40	44	48	52	56	60	64	68	84	88	93	98	116
Rain Cap	CC	11 lbs.	14	16	19	22	25	28	32	35	39	43	47	51	60	66	72	80
Rain Collar	RC	5 lbs.	6	6	7	7	8	8	9	9	10	10	11	11	12	12	13	13
Support Plate	SP	31 lbs.	36	42	47	53	58	64	70	76	99	107	114	122	130	138	146	186
Tapered Increaser	TI	28 lbs.	32	37	42	47	60	66	71	77	82	88	93	99	105	110	116	136
Top Section	TS	6 lbs.	7	8	9	10	11	12	13	14	15	16	17	18	22	23	24	28
Variable Section	VS	52 lbs.	61	71	80	89	98	107	117	126	135	144	153	191	202	213	223	259
Wall Guide	WG	15 lbs.	20	21	23	25	27	34	37	40	42	46	48	52	54	57	60	63
Wall Support	WS	49 lbs.	60	70	81	91	103	118	132	149	179	199	215	236	254	277	295	346

All weights shown above are actual weights, for shipping weights multiply by 1.25

SAMPLE SPECIFICATION - FYREGUARD™

The factory-built modular grease duct system is laboratory tested and listed in accordance with Underwriters Laboratories Standard UL 2221 classified for **zero clearance** to combustible. Sections shall bear the UL listing mark and the cUL listing mark for Canada. Sections shall be sealed with banded flanges and silicone joint sealant.

Inner shell material shall be type 304 stainless steel. Inner shell thickness shall be .036" for 5" to 36" diameter systems. All inner shell seams shall be full penetration welded the entire length of the pipe section. Riveted, tack or spot welded seams are not permitted.

Outer shell material shall be 430 stainless steel with a thickness of .034" for 5" to 36" diameter systems. All outer shell seams shall be full penetration welded the entire length of the pipe section. Riveted, tack or spot welded seams are not permitted.

Between the inner and outer shells there shall be a minimum 4" of 1800°F rated low conductivity ceramic fiber insulation. The insulation is to be securely attached to the inner shell with steel straps and insulating pins welded to the inner shell. Stainless steel centering clips shall be welded to the outer shell to maintain the 4" spacing and ensure concentricity of the shells.

Breeching and chimney sections, when installed according to manufacturer's instructions, shall comply with national safety standards and building codes. Stacks terminating above a roof must terminate as required by code or NFPA 211.

Chimney sections exposed to atmospheric conditions shall be protected by a minimum of one base coat and one finish coat of heat resistant paint after installation. Outer shells of type 304 or 316 stainless steel need not be painted.

LIMITED LIFETIME WARRANTY GREASE DUCT APPLICATIONS

The Schebler Company warrants its FyreGuard™ model products installed in grease duct applications against defects in material and workmanship for the entire duration the product is incorporated and used in its original installation when said product is properly installed per Schebler's design and current installation instructions or specifications, and is properly connected to a code compliant commercial kitchen ventilation system for cooking appliances. This warranty is subject to all terms and conditions described in The Schebler Company's Standard Terms and Conditions of Sale.

The Schebler Company will, at its sole discretion, either repair or replace any defective product covered by this Limited Warranty at no charge, provided however Buyer shall be responsible for all costs of removal, shipping, and reinstallation of the product. Furthermore, this warranty does not apply to any system component not manufactured by Schebler Company and installed as part of the UL system. Repair or replacement of products provided under this Limited Warranty are similarly warranted for the remainder of the original warranty term.

This limited warranty is extended solely to the original owner subject to the satisfaction of the following conditions:

1) System sizing and design has been performed by Schebler personnel and the design parameters provided to The Schebler Company by the responsible engineer were and are accurately representative of the system operating conditions.

2) The undamaged components have been correctly installed in accordance with Schebler system design and sizing, and installation instructions published by The Schebler Company.

3) Proper precautions were taken to not damage grease duct during cleaning of system, including improper solvents or chemicals which may also cause damage.

4) The Schebler Company has supplied the entire grease duct system from connection to the commercial cooking appliance to the termination of grease duct.

5) Prior to start-up and thereafter, exposed aluminized steel surfaces were protected with a minimum of one base coat of primer and one finish of heat resistant paint at all times.

The Schebler Company makes no other warranty, whether expressed or implied. This warranty shall be the sole and exclusive remedy of any Buyer, whether in contract, tort or otherwise. UNDER NO CIRCUMSTANCES SHALL THE SCHEBLER COMPANY BE LIABLE FOR ANY INCIDENTAL OR CONSEQUENTIAL DAMAGE, OR COMMERCIAL LOSS OR FROM ANY OTHER LOSS OR DAMAGE EXCEPT AS SET FORTH HEREIN. The Schebler Company assumes no liability for any damages resulting in whole or part from misuse, improper installation, or inadequate maintenance of the system or component part thereof, nor assumes or authorizes any other person or entity to assume on its behalf any other liability in connection with the sale of its products.

Schebler
CHIMNEY SYSTEMS

FyreGuard™

ZERO-CLEARANCE GREASE DUCT

. . . FROM THE SCHEBLER FAMILY.

New FyreGuard™ zero-clearance grease ducts mean important advantages for food service fire safety. These include 3" insulation, **zero clearance** to combustibles, 2-hour fire rating and no need for a fire-rated chase.

All Schebler prefabricated systems and engineered stacks are known by the value they provide through unmatched dimensional accuracy, detailed draft calculations and the industry's fastest lead-times. These translate into fast project completion, lowered installation costs and satisfied customers.

WE'RE ALL ABOUT METAL.

Outstanding chimney systems aren't all that Schebler manufactures. From complex parts formed with repeatable precision by our **Specialty Fab** division … to indoor air quality systems designed and installed by our **Heating & Air (HVAC)** group … to cooling tunnels, coating systems and conveyors innovated by our **Food Equipment** specialists … **we know how to make metal perform.**

Contact us or visit our Web site today for more information on chimney products and applications. We look forward to responding with an individualized solution.

Schebler

CHIMNEY SYSTEMS

P 800.391.0009 • 563.359.0110 • F 563.359.8430
5665 Fenno Rd • Bettendorf, Iowa 52722
www.schebler chimney.com

AD&M - 1-20